FIREFIGHTING EQUIPMENT

User manual

"MIXY Eductor"

400 lpm, in aluminium, control valve, metering device with hose and pick-up tube inlet and outlet 2'' BSP male thread

MOP_PRO_02341_EN_A - 08/07/2021

POK SAS - 18 Cours Antoine Lavoisier - 10400 Nogent-sur-Seine - FRANCE
Phone: +33 (0)3 37 49 53 000 - Email: export@pok-fire.com - Web: www.pok-fire.com

Identification

MIXY EDUCTOR - Eductor 400 lpm, in aluminium, male inlet and outlet couplings 2" BSP

DESIGNATION	DESCRIPTION
Product type	Eductor
Product	"MIXY" eductor, 400 lpm, in aluminium, with control valve and metering device, with hose and pick-up tube, inlet and outlet couplings 2'' BSP male thread
Product reference concerned by the manual	Ref.: 31443 Ref 31443 and 22235 used for all visuals
N° of documentation	MOP_PRO_02341_EN
Language	English
Creation Date	08/07/2021
Last modification	-
Review follow up	Rev. A - 08/07/2021: - Original file

POK SAS - 18 Cours Antoine Lavoisier - 10400 Nogent-sur-Seine - FRANCE
Phone: +33 (0)3 37 49 53 000 - Email: export@pok-fire.com - Web: www.pok-fire.com

Table of contents

IDENTIFICATION 2
TABLE OF CONTENTS 3
WARNING 4
1 • Note 4
2 • General Warning 4
3 • Safety 4
4 • Liability 5
5 • Operational instructions 5
6 • Warranty 6
7 • Handling / Transport / Storage 6
TECHNICAL DATA 8
• Main view 8
• Technical characteristics 9
• Overall dimensions 10
INSTRUCTIONS FOR USE 11
INSTALLATION 11
USE 12
• Settings 12
MAINTENANCE 13
• Causes of malfunctions - solutions 13
• Dismantling inlet/outlet cones 14
• Dismantling metering device 15
• Dismantling control valve 16
• Storage conditions 17
• Cleaning 17
• Spare parts 17
BILL OF MATERIALS 18
• Exploded view 18
• Parts list 19
NOTES 20

1 • Note

POK SAS reserves the right to change or modify the specifications of its products at any time to incorporate the latest technological and regulatory developments. The information contained in this document is subject to change without notice.

2 • General Warning

Before any use or installation of POK equipment, it is mandatory to read the information contained in this operating manual, to guarantee the safety of persons and material. The use, maintenance, or any other operation of the equipment, must be carried out exclusively by personnel informed of safety rules and trained in the use of this material.
The non-compliance of safety instructions can be dangerous and cause serious bodily harm and/or property damage.

3 • Safety

This symbol indicates important safety tips. Pay careful attention to prevent serious bodily harm and/or property damage.

This symbol indicates instructions that must be observed to ensure smooth operation of the device. Please always make sure to follow all the necessary precautions.

INFORMATION This symbol indicates useful information to know and understand the correct operation of the device.

3.1 • General instructions

Operators should read the operating instructions written in this manual before using the eductors. They shall not be used by people suffering from vision or hearing problems, illness or under medication.

In order to work safely, please observe the following instructions while using the material:
• Material shall be used according to the instructions written by POK in this manual.
• Systematically control the good condition of the eductors before any use.
• Any use not following the manual instructions could result in damages to people, to material or to environment.
• Always know the hydraulic characteristics of the eductors.
• Do not unnecessarily expose people to dangerous fire conditions.
• Always open the water supply valves carefully, in order avoid any water hammer in the hoses.
• Never go over the indicated maximum flow rate and pressure, it could result in injuries to people and/or damages to the eductor.
• Replace the instructions stickers if worn or damaged.
• The eductor shall be kept clean and protected against dust.
• Important material damage and physical injuries are to be feared in the following situations:
- Unauthorised removal of a protection part,
- Improper use of the material or in dangerous situations,
- Poor maintenance,

POK SAS - 18 Cours Antoine Lavoisier - 10400 Nogent-sur-Seine - FRANCE
Phone: +33 (0)3 37 49 53 000 - Email: export@pok-fire.com - Web: www.pok-fire.com

- Maintenance on the material while under pressure.

Never go over the indicated maximum flow rate and pressure, it could result in injuries to people and/or damages to the eductor.

INFORMATION The frost damages can be irreversible, drain the eductor at low temperature (near 0°C and below).

3.3 • Use

An proper usage of POK material implies following the indicated use and maintenance instructions.
Please follow each instruction listed in this user manual.

The equipment should not be used if a component is damaged or missing

Work pressure is 10 bar at the inlet of the eductor. Efficiency and safety of the material is not guaranteed beyond this value. Non-compliance with safety instructions and use of the material over the recommended pressure can be dangerous and even cause death.

3.4 • Limits of use

Our eductors are guaranteed for a maximum working pressure of PN 16. Without explicit written authorization from POK, the warranty will be void if the pressures listed above are exceeded.

3.5 • Spare Parts

Regarding spare parts, only use POK parts and accessories.

3.6 • Safety elements

It is forbidden to render safety features inoperative, to modify them or to use them in an opposite manner to their purpose.

4 • Liability

POK's liability is excluded for all damages caused by its material and its accessories because of an improper use or because operated by non-qualified or not enough qualified people. Any claim from third parties is also excluded.
POK cannot be held liable for consequences resulting from a change, made on the mechanical and electrical part and also on the software, by the user without written authorization from POK.

4.1 • Obligations

The owner of POK's material shall bring the instructions written in this manual to the attention of all people likely to handle, use, install or do maintenance on this material.
The user manual has to be stored near the material for further consultation all along the life of the eductor.

5 • Operational instructions

5.1 • General remarks regarding safety during operations

Any person under the influence of drugs, alcohol or under medication that might undermine his reflexes is not authorized to use the eductor.

Please observe all local, national and international instructions regarding property and persons safety, accident prevention and environmental compliance.

Any non-compliance with these instructions and the one in this manual may lead to serious injuries.

INFORMATION Complete the manual with the rules in place where the eductor is used (personal protective equipment, operation sequence, storage of the remote control, etc.).

6 • Warranty

• Without prejudice to the legal guarantee that applies in any case, POK grants a warranty of 2 years from the shipping date on its material (eductor, accessories) apart from wearing parts and batteries, against faulty design, construction and machining and against all abnormal wear on condition of having observed the use and maintenance instructions in this manual.
• Any attempt to troubleshoot, modify any components or parts, as well as any use of parts that are not original and/or expressly approved by POK, by a non-authorized dealer, and without written permission, results in the loss of the POK guarantee for all parts.
• POK's warranty excludes all damages resulting from:
- improper use or non-compliance with the instructions,
- an error while operating the material,
- negligence,
- lack of maintenance,
- improper handling,
- improper storage,
- a use in polluted areas (chemical or electrochemical agents, hazardous fumes, etc.).
• Only a specialized staff, qualified and trained by POK is allowed to do maintenance and repair POK products.
• POK cannot be held liable for direct or indirect consequences suffered by the client, due to a failure of its material. POK's liability is strictly limited to its material and will not lead to a compensation to cover damages and interest.
• Repair or modification of POK material while under warranty does not extend the warranty period.
• Cost of packing, transport and insurance when sending POK material back to our premises while under warranty is the responsibility of the client.
• POK warranty includes the repair (spare parts and labour) or replacement of parts recognised as faulty after technical assessment. The place of performance of the warranty is POK's plant in Nogent-sur-Seine (10).
• In the event of dispute regarding the supply or the payment of material, only the commercial court of TROYES is competent, even in the event of appeal or multiple defendants.

POK SAS - 18 Cours Antoine Lavoisier - 10400 Nogent-sur-Seine - FRANCE
Phone: +33 (0)3 37 49 53 000 - Email: export@pok-fire.com - Web: www.pok-fire.com

7 • Handling / Transport / Storage

7.1 • General

When unpacking the eductor after transport, check that there is no mechanical damage and/or loose parts in the interior of the package. In case of damage, the carrier must be informed immediately. In this case, do not put the equipment into use.

7.2 • Delivery Information

POK equipment is delivered in a packaging adapted to the weight and dimensions of the material. Packaging is securely closed. A delivery note is included with the equipment.

7.3 • Shipment of Material

In case of reshipping the equipment, or transferring the shipment to other sites, the shipping process above should be followed.

7.4 • Storage of Material

When storing the device, it is recommended to keep it in its original packaging to protect from humidity, dust and kept at a temperature.between +10° and +70°C.

• Main view

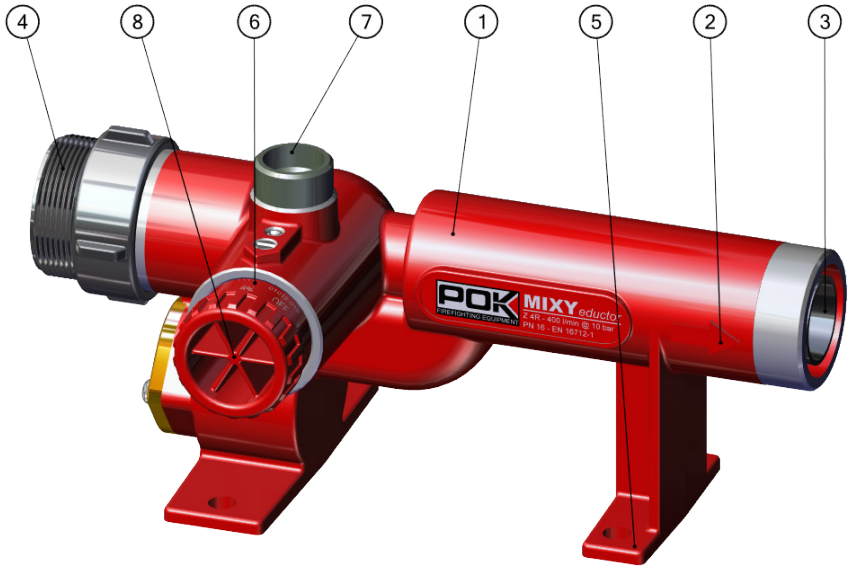

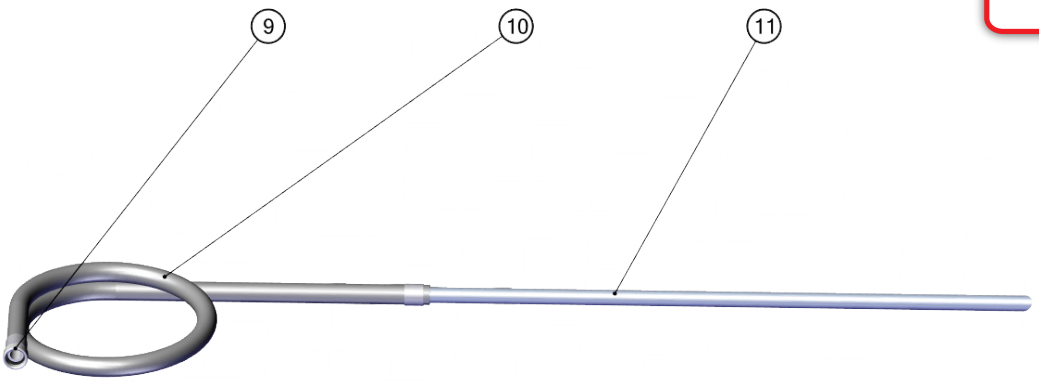

MARK	DESCRIPTION
1	Body
2	Arrow to indicate assembly direction
3	Outlet 2" BSP male thread **Note:** A coupling is available upon request. See our catalogue for more information on couplings.
4	Inlet 2" BSP male thread **Note:** A coupling is available upon request. See our catalogue for more information on couplings.
5	Stabilizing feet
6	Metering device
7	Suction coupling with ball non-return valve
8	Control valve
9	Suction coupling, GFR DN20 female **Note:** A coupling is available upon request. See our catalogue for more information on couplings.
10	Pick-up hose
11	Suction rod

POK SAS - 18 Cours Antoine Lavoisier - 10400 Nogent-sur-Seine - FRANCE
Phone: +33 (0)3 37 49 53 000 - Email: export@pok-fire.com - Web: www.pok-fire.com

• Technical characteristics

FIELDS	VALUES
Body and suction coupling	• Aluminium
Entrance and exit cone	• Synthetic
Metering device and control valve	• Nylon
Non-return ball	• Polypropylene
Screws and filter	• Stainless steel
Pick-up hose	• PVC reinforced with a metal wire
Suction rod	• EPDM
HYDRAULIC CHARACTERISTICS	
Maximum working pressure	• 16 bar
Maximum working pressure	• 25.5 bar
Operating pressure at the inlet	• 10 bar
Operating pressure at the outlet	• 6.5 bar
Flow	• 400 lpm
Suction	• Venturi, with no return valve
Suction setting	• By metering device 0%, 0.1%, 0.25%, 0.5%, 1%, 2%, 3%, 4%, 5% et 6%
Pressure loss	• 35%
Type of foam agent recommended	• All types of synthetic foams
MECHANICAL CHARACTERISTICS	
Inlet	• 2" BSP male thread
Note: A different coupling is available upon request. See our catalogue for more information on couplings.	
Outlet	• 2" BSP male thread
Note: A different coupling is available upon request. See our catalogue for more information on couplings.	
Suction coupling	• GFR DN20
Note: A different coupling is available upon request. See our catalogue for more information on couplings.	
Weight	• 2.6 Kg

• Overall dimensions

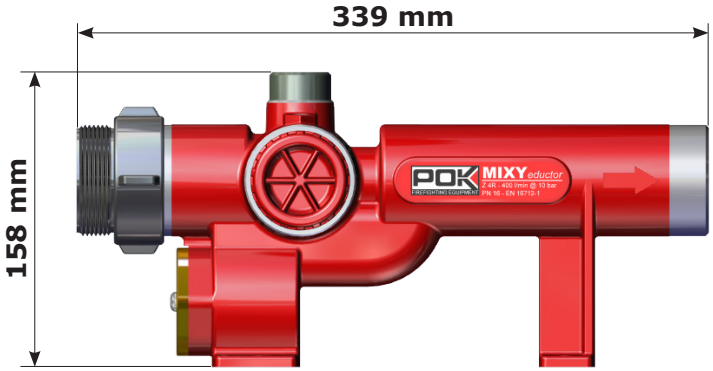

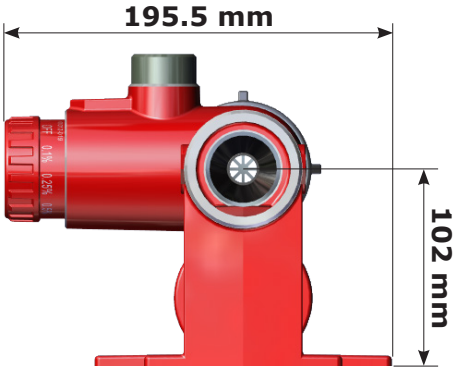

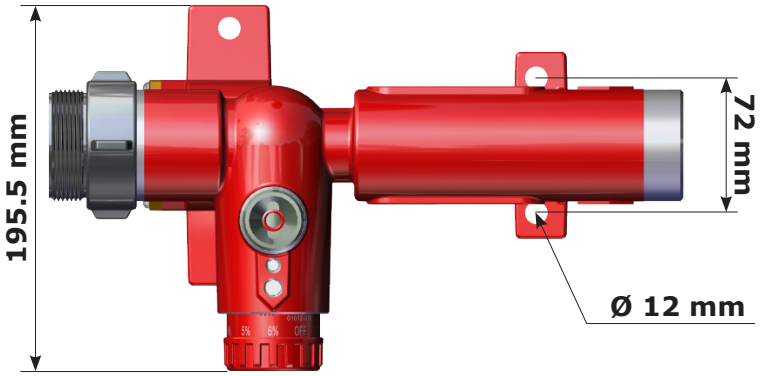

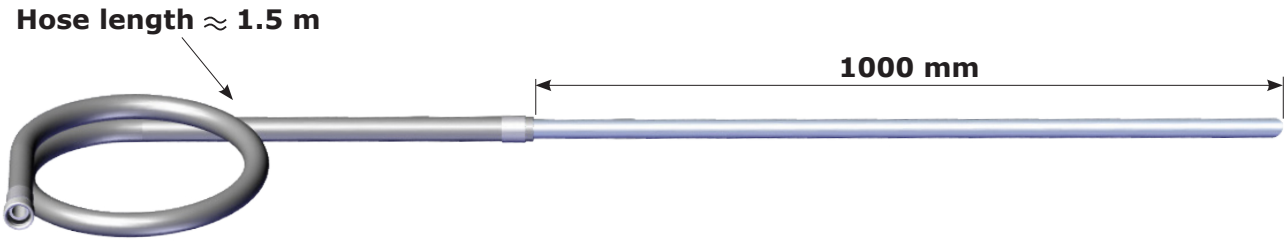

Weight: 2.6 Kg

POK SAS - 18 Cours Antoine Lavoisier - 10400 Nogent-sur-Seine - FRANCE
Phone: +33 (0)3 37 49 53 000 - Email: export@pok-fire.com - Web: www.pok-fire.com

Place the eductor between the pump (mark A) and the foam production equipment (mark B).
The suction rod must be emerged in the emulsifier container (mark C).
Please mind the hoses are straight at least within 1 meter at both sides of the eductor when operating.
The eductor must be compatible with the foam producer and take account of the loss of pressure in the hose.
Pump must be powerful enough to obtain a 150 PSI (10 bar) pressure at the inlet of the eductor.

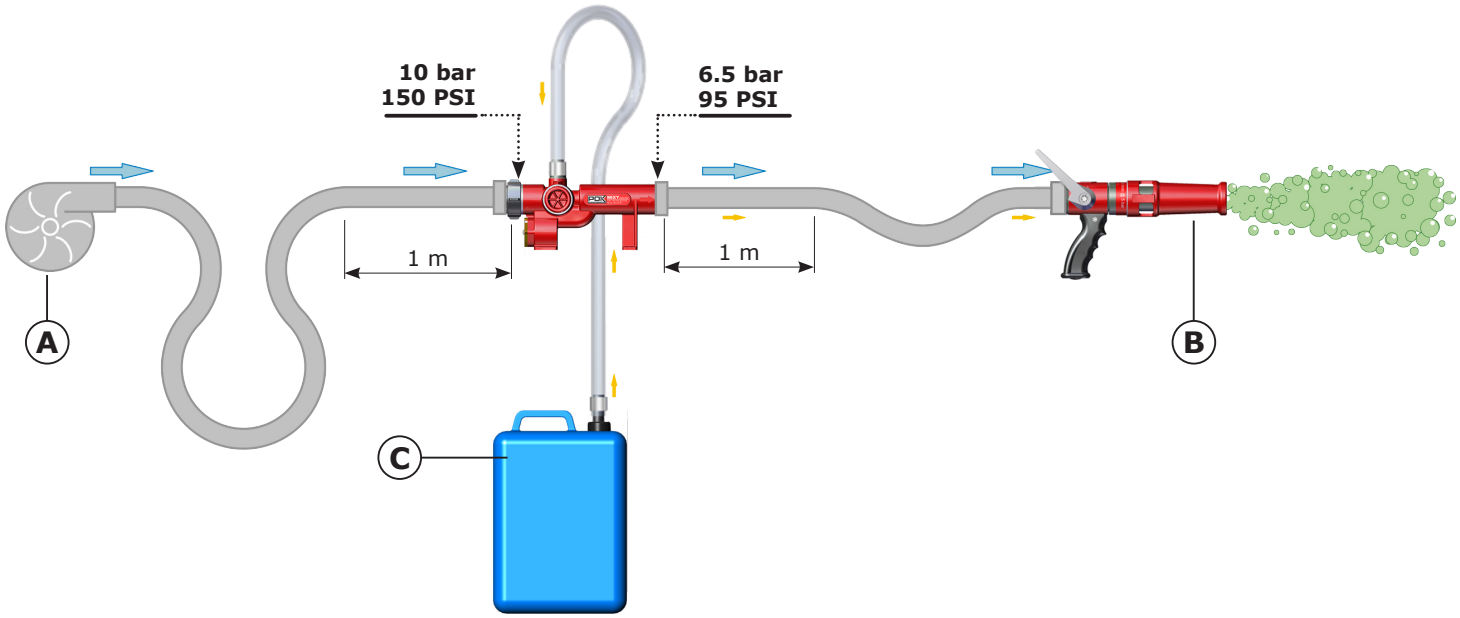

Connect the eductor to the water inlet (mark A) and the outlet (mark B) following the directional arrow engraved on the eductor.

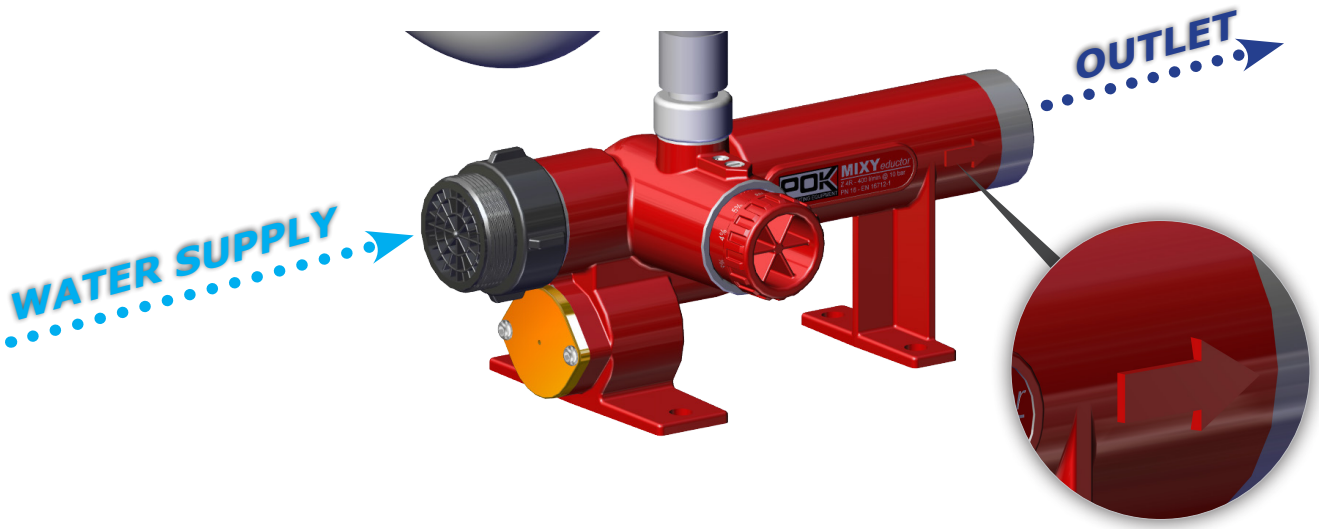

Eductors are settled for indicated flow rate with maximum tolerance of 10% less and 35% of pressure loss.
There is a direct relationship between the pressure loss and the suction.

• Settings

1 - Make sure that there are no leaks during installation.

2 - Start the pump and increase the pressure gradually to reach 10 bar (150 psi) at the eductor inlet.

3 - Place the rod in the emulsifier

4 - The emulsifier is sucked automatically and mixed with the water. Rotate the selection ring on the eductor to set the percentage of emulsifier. The foam forms at the outlet of the foam production device after a few seconds delay.

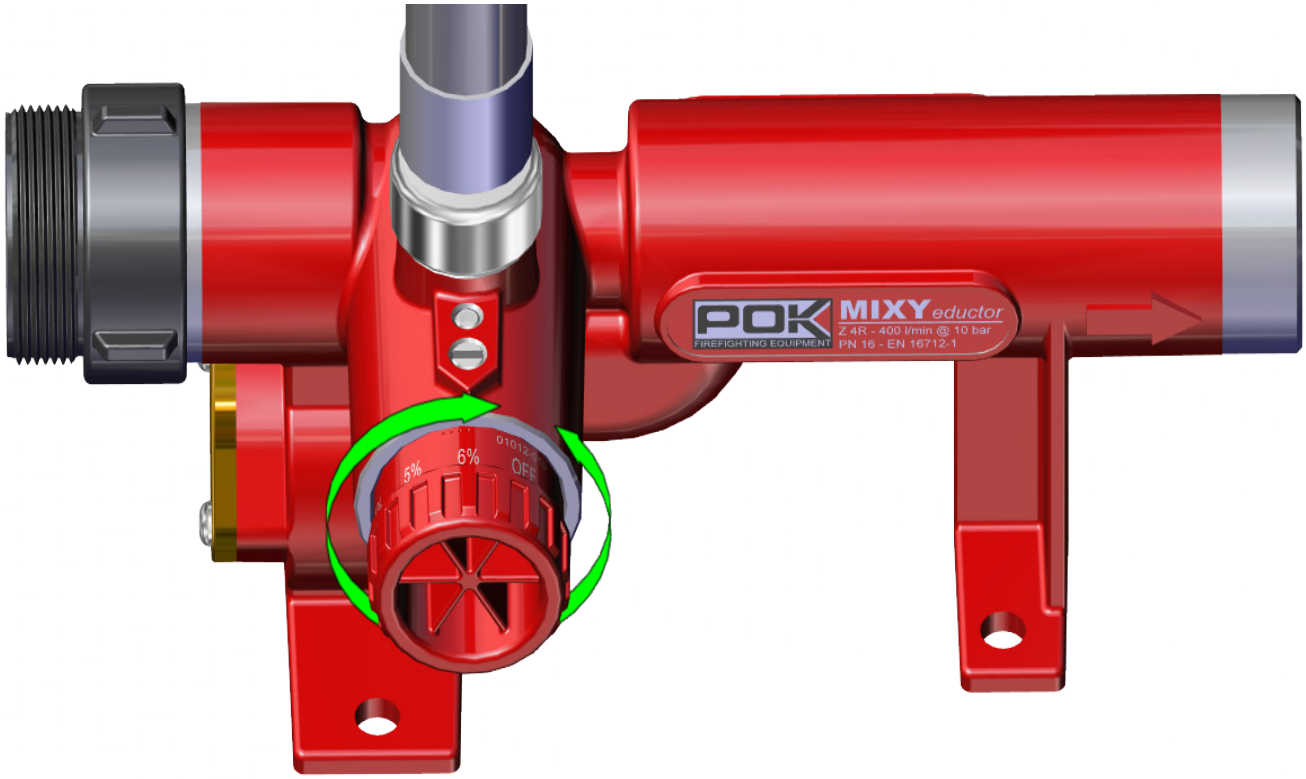

5 - Once operations ended, immerse the pick-up tube in clean water and rinse throughly the eductor under pressure.

POK SAS - 18 Cours Antoine Lavoisier - 10400 Nogent-sur-Seine - FRANCE
Phone: +33 (0)3 37 49 53 000 - Email: export@pok-fire.com - Web: www.pok-fire.com

• Causes of malfunctions - solutions

1 - Impureties or particles in the entrance cone could prevent the eductor from functioning properly. These particles can been carried by a dirty suction rod or water. Follow the steps detailled "disassembly exit/ entrance cone" (page 14) to clean the suction chamber

2 - A waterhammer may have moved the membrane of the control valve. To remove the membrane and put back in its place, follow the steps detailled "disassembly the control valve" (page 15). Open and close smoothly valves avoiding this.

3 - The direction of assembly must always be respected. Be sure the arrow on the body of the eductor show the flow direction (page 11).

4 - The functioning of the eductor may be affected if the metering device cannot be turns or turns roughly Follow the steps "disassembly metering device" (page 15) to set or replace the metering device.

5 - The body of the eductor protects the entrance and the exit cone from bump and a filter from particles. However, particles carried by water may damage these parts over time. Then, replace these by paying attention to the flow rate of the spare pieces. Follow the steps "dismantling entrance/exit cone" (page 14).

6 - Due to a bump or a crushing, the body of the eductor may been distorted or internal components broken. Replace the eductor by a new one. If it seems fixable, you can request a price quotation.

7 - The eductors are designed to work with foam equipment with a similar flow rate. The European standard requires a pressure of 6.5 bar at the outlet for a pressure of 5 bar at the foam branchpipe inlet.

If the pressure loss is higher than 1.5 bar (hose too long or branchpipe too high comparative to the eductor), the device will no longer working and can not suck up the emulsifier.

As a reminder, each elevation meter between the eductor and the branchpipe raise the pressure loss of 0.1 bar. The eductor is designed to suck up to 1.5 meter above the emulsifier. Beyond, the device can not suck up the emulsifier, except for specific design.
Depending on the bend radius, a 90° turn generate a significant pressure loss, any break or fold must be avoided in the hoses.

8 - According to the mode and frequency of use, leakage may appear at the metering device due to the wear of gaskets. If this occurs, follow the steps "dismantling metering device" (page 15).

It is important to check, after each use, that no part is missing or damaged. Where necessary, please replace it as soon as possible.

Maintenance operation of the device must be done with water supplies cut off and system drained.

• Dismantling inlet/outlet cones

1 - Unscrew the stop (mark 5).
2 - Replace the gasket R18 if necessary (mark 4) with a new one and grease it before reassembling the components
3 - Remove the filter holder ring (mark 30).
4 - Unscrew the stop (mark 3) Replace the gasket R21 if necessary (mark 2) grease the gasket before reassembling the components
5 - Clean the suction chamber with a hook or a cleaning brush.
6 - Grease the gaskets and reassemble the components in the reverse order.

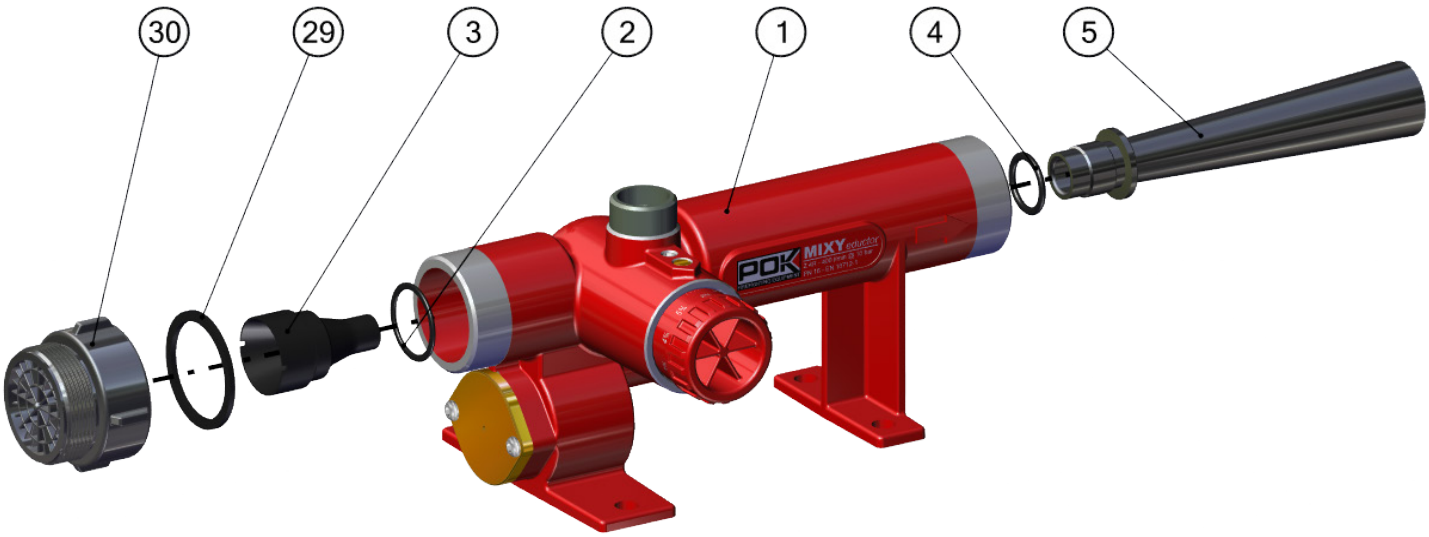

MARK	QTY	DESCRIPTION	CODES
1	1	BODY OF EDUCTOR	31447
2	1	O'RING R21	-
3	1	ENTRANCE CONE	39072
4	1	O'RING R18	-
5	1	EXIT CONE	39073
29	1	FLAT GASKET FOR BOTTOM THREAD 2" BSP	25727
30	1	FILTER 2"	31405

POK SAS - 18 Cours Antoine Lavoisier - 10400 Nogent-sur-Seine - FRANCE
Phone: +33 (0)3 37 49 53 000 - Email: export@pok-fire.com - Web: www.pok-fire.com

• Dismantling metering device

1 - Unscrew the guidance screw (mark 13).
2 - Unscrew inlet filter (mark 14), remove the gasket (mark 15) and the ball (mark 16).
3 - Dismantling the metering device (mark 7), clean it and its seat.
4 - Replace the gaskets (mark 6) with a similar new ones, grease before replacing.
5 - Reassemble the components in the reverse order and glue screws (loctite 243).

MARK	QTY	DESCRIPTION	CODES
6	2	GASKET Ø50 x Ø3 TCOAT PSN	06195
7	1	METERING DEVICE	40915
8	1	O'RING Ø53 x Ø3	16839
9	1	NON-RETURN VALVE	43356
10	1	BALL Ø22	16393
11	1	DN 25.2 RUSH	12495
12	39	BALL Ø4	-
13	1	FLAT STHC SCREW M8X8 STAINLESS STEEL A2 ISO 4026	-
14	1	GUIDE	31448
15	1	INDEX SPRING	08019
16	1	BALL Ø5	-

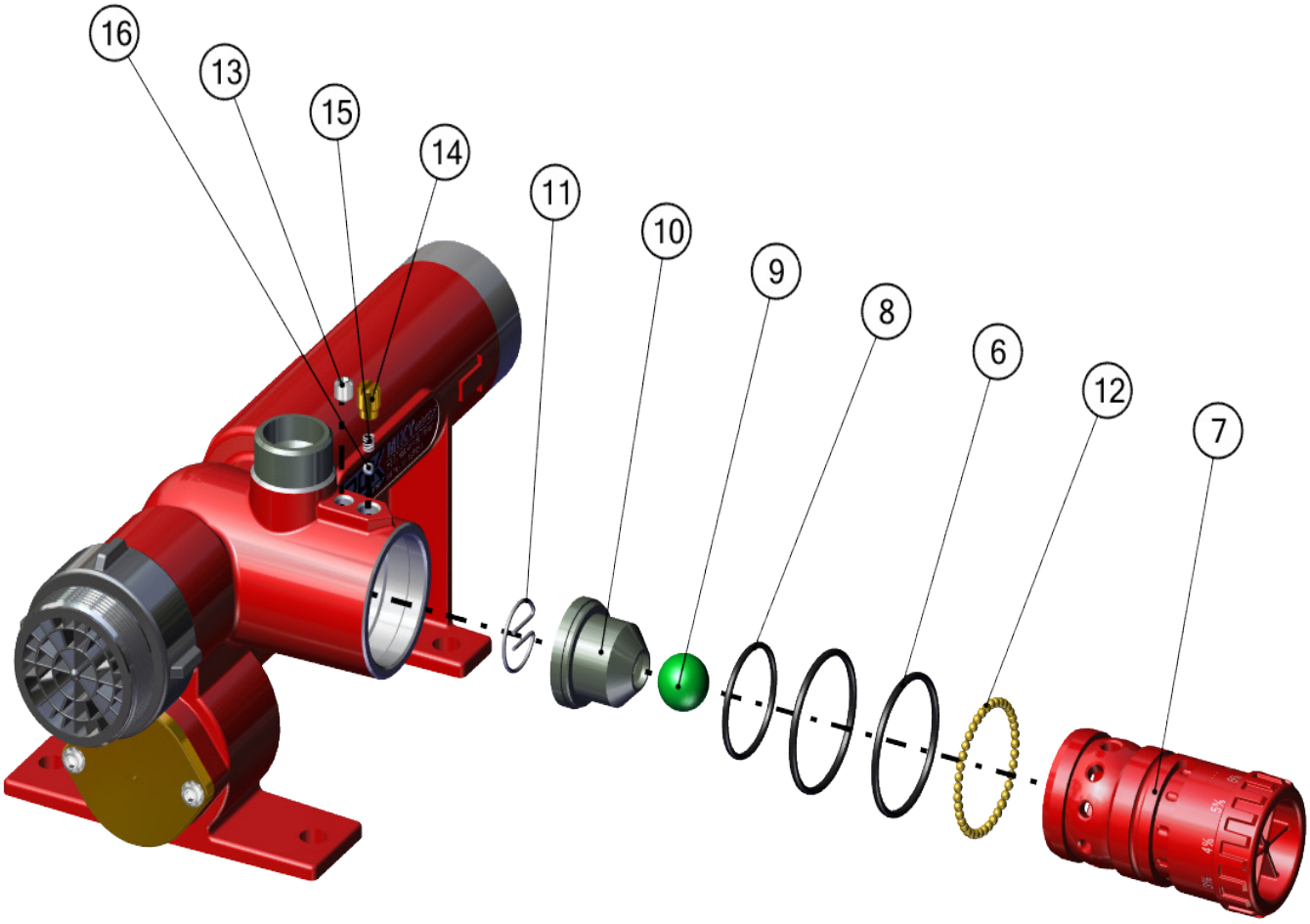

• Dismantling control valve

1 - Remove the screw (mark 28) and drop off the whole valve
2 - Unscrew the retainer flange of the control valve body (mark 26).
3 - With a Allen wrench, unscrew nut (mark 25).
4 - Drop off the shouldered ring (mark 24) and the calibrated washer (mark 23) and the diaphragm (mark 21).
5 - Replace the diaphragm by a new one and replace gaskets (mark 27), grease gaskets.
6 - Reassemble the components in the reverse order and glue screws (loctite 243).

MARK	QTY	DESCRIPTION	CODES
20	1	BODY	15151
21	1	MEMBRANE OF CONTROL VALVE	07220
22	1	CONTROL VALVE BODY	15153
23	1	PROTECTIVE GASKET OF CONTROL VALVE	15182
24	1	SHOULDERED RING	15154
25	1	NUT H M8	-
26	1	FLANGE	15156
27	2	O'RING R27	-
28	2	TBHC SCREW M6X20 STAINLESS STEEL A2 ISO 7380	-

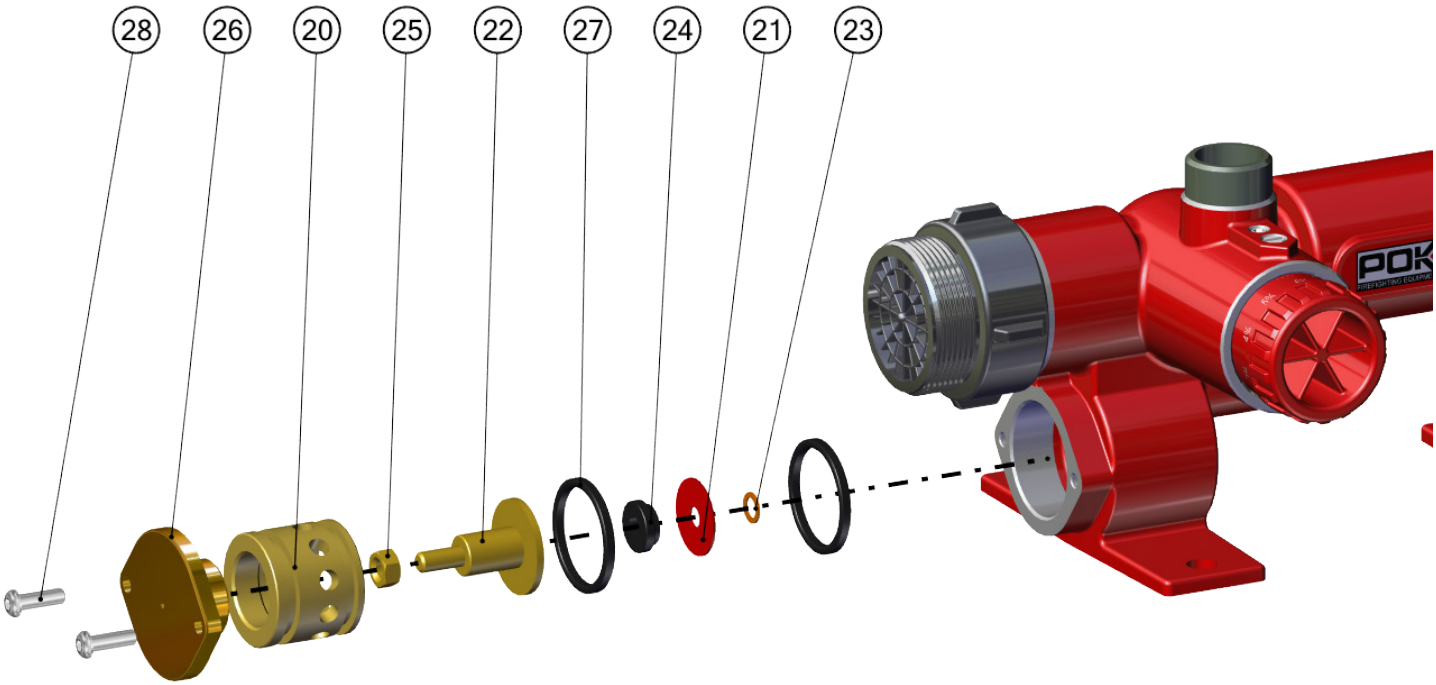

• Storage conditions

Store the equipment in a clean environment, mud, sand or other element could impede operation of the equipment, and in rare cases damage it.

• Cleaning

Do not use corrosive products. It can damage the coating of parts of the eductor or damage gaskets.
The soapy water and a cloth are most of the time enought to clean the eductor.

• Spare parts

Depending on use and/or storage conditions, some parts may get damaged more or less faster. Contact our sales department in order to obtain information about return or to get a price list.
Use exploded views and part lists to accurately identify parts.

• Exploded view

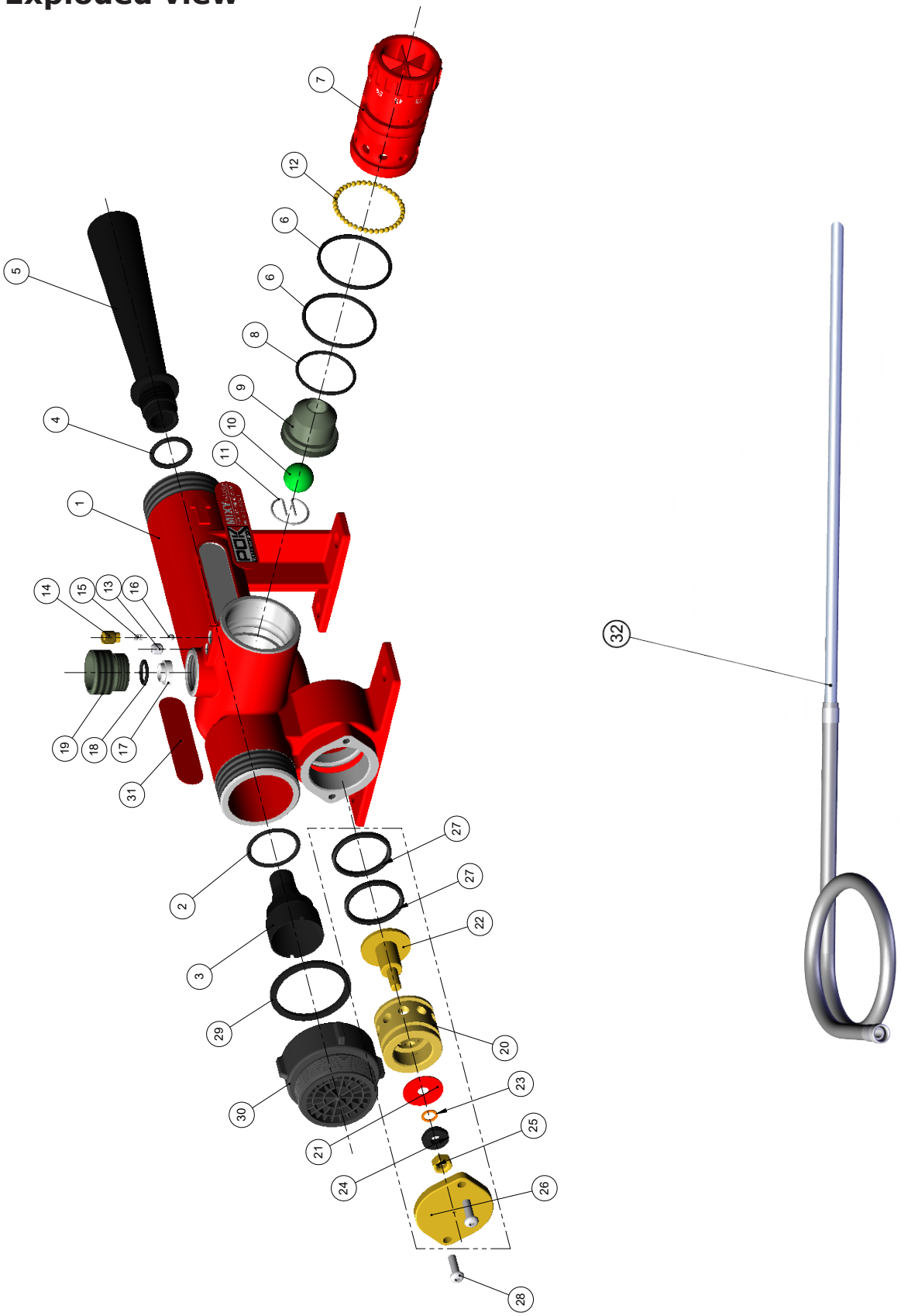

POK SAS - 18 Cours Antoine Lavoisier - 10400 Nogent-sur-Seine - FRANCE
Phone: +33 (0)3 37 49 53 000 - Email: export@pok-fire.com - Web: www.pok-fire.com

• Parts list

MARK	QTY	DESCRIPTION	CODES
1	1	BODY OF EDUCTOR	31447
2	1	O'RING R21	-
3	1	ENTRANCE CONE	39072
4	1	O'RING R18	-
5	1	EXIT CONE	39073
6	2	O'RING Ø50 X Ø3 TCOAT PSN	06195
7	1	METERING DEVICE	40915
8	1	O'RING Ø39.5 X Ø3	16839
9	1	NON-RETURN VALVE	43356
10	1	BALL Ø22	16393
11	1	WIRE RING DN25.2	12495
12	39	BALL Ø4	-
13	1	FLAT STHC SCREW M8X8 STAINLESS STEEL A2 ISO 4026	-
14	1	GUIDE	31448
15	1	INDEX SPRING	08019
16	1	BALL Ø5	-
17	1	GASKET	43357
18	1	O'RING R11	-
19	1	CABLE GLAND	43358
20	1	BODY	15151
21	1	MEMBRANE OF CONTROL VALVE	07220
22	1	CONTROL VALVE BODY	15153
23	1	PROTECTIVE GASKET OF CONTROL VALVE	15182
24	1	SHOULDERED RING	15154
25	1	NUT H M8	-
26	1	FLANGE	15156
27	2	O'RING R27	-
28	2	TBHC SCREW M6X20 STAINLESS STEEL A2 ISO 7380	-
29	1	FLAT GASKET FOR BOTTOM THREAD 2" BSP	25727
30	1	FILTER 2"	31405
31	2	STICKER	31988
32	1	SUCTION ROD	22235

Notes

POK SAS - 18 Cours Antoine Lavoisier - 10400 Nogent-sur-Seine - FRANCE
Phone: +33 (0)3 37 49 53 000 - Email: export@pok-fire.com - Web: www.pok-fire.com